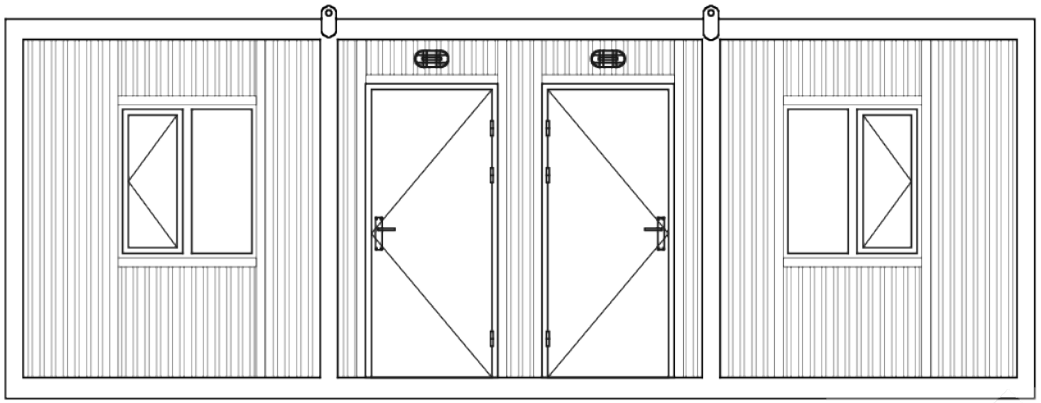

ON GORUNUS

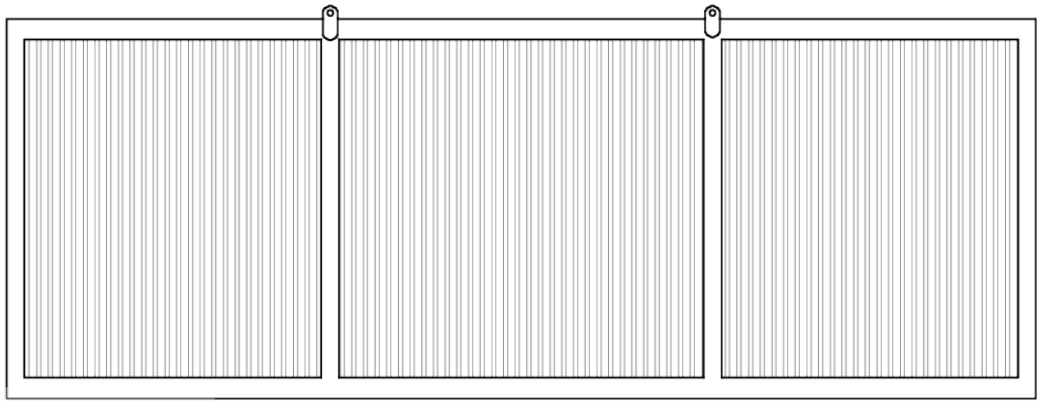

ARKA GORUNUS

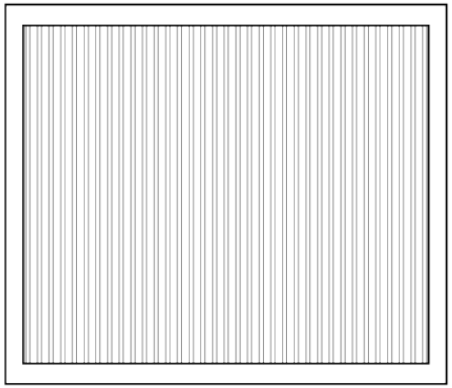

SOL GORUNUS

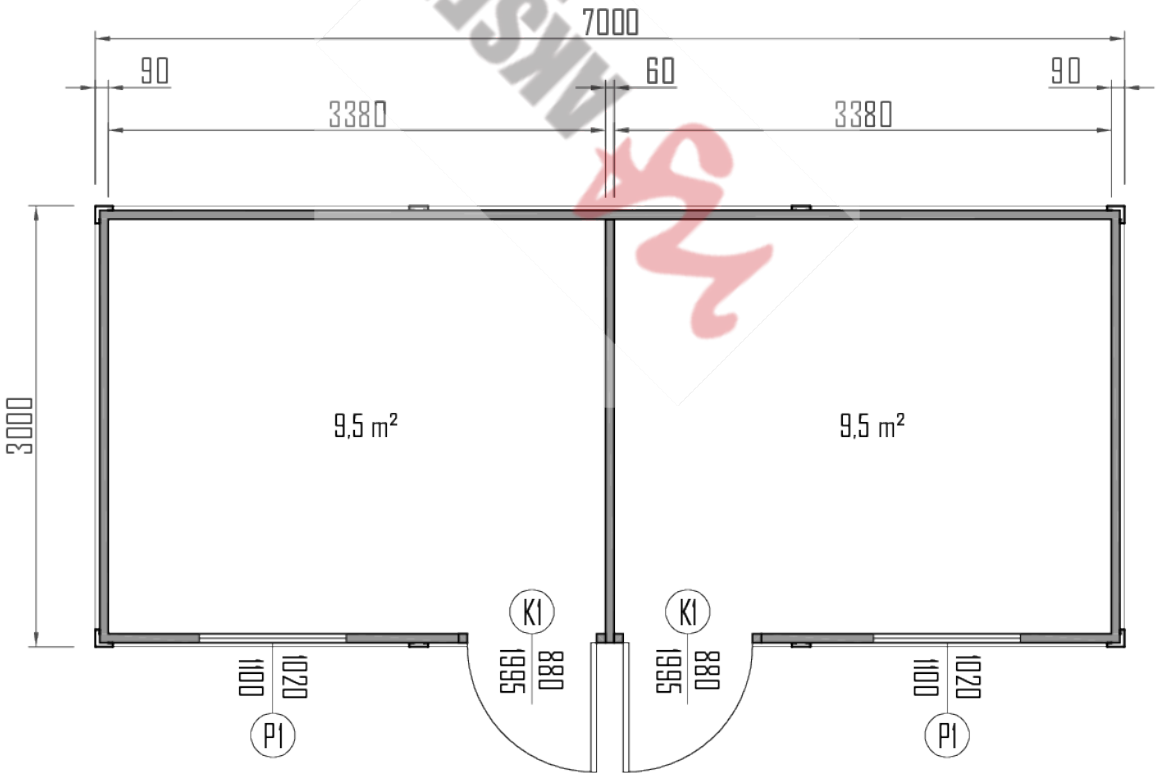

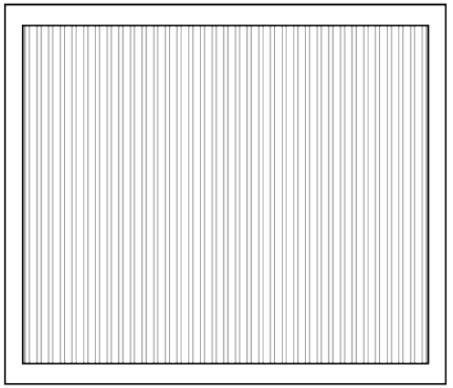

SAG GORUNUS

AKSEL PREFABRIK